Self Closing Valve (Threaded)

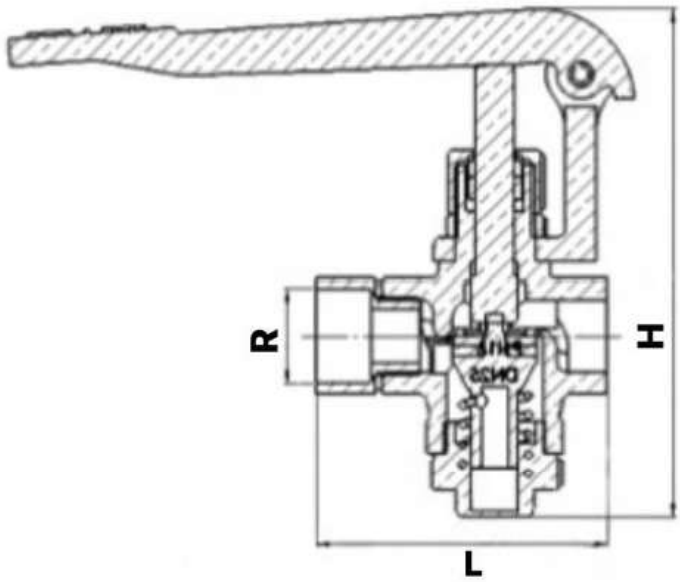

PARÇA ADI PART NAME	MALZEME MATERIAL
GÖVDE / BODY	BRONZE
MİL / STEM	BRASS
KLAPE / DISC	BRASS
KOL / LEVER	BRASS

SIZE	R	H	FACE TO FACE (L)
DN15	1/2"	133	60
DN20	3/4"	147	70
DN25	1"	162	80
DN32	1-1/4"	199	96
DN40	1-1/2"	212	104
DN50	2"	217	130